G-WWJ
GH-WWJ

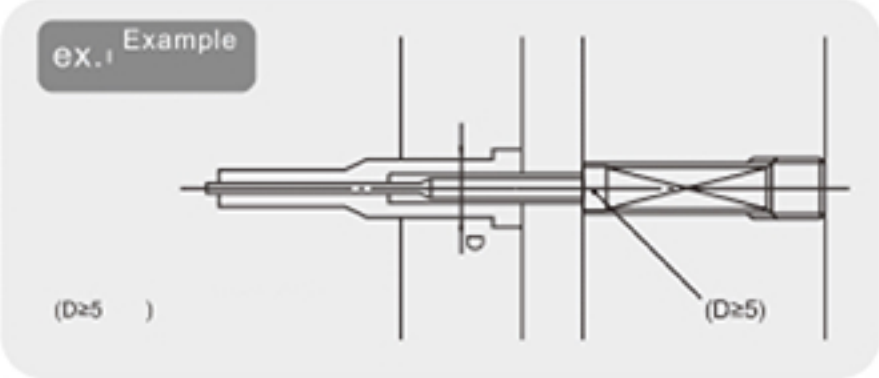

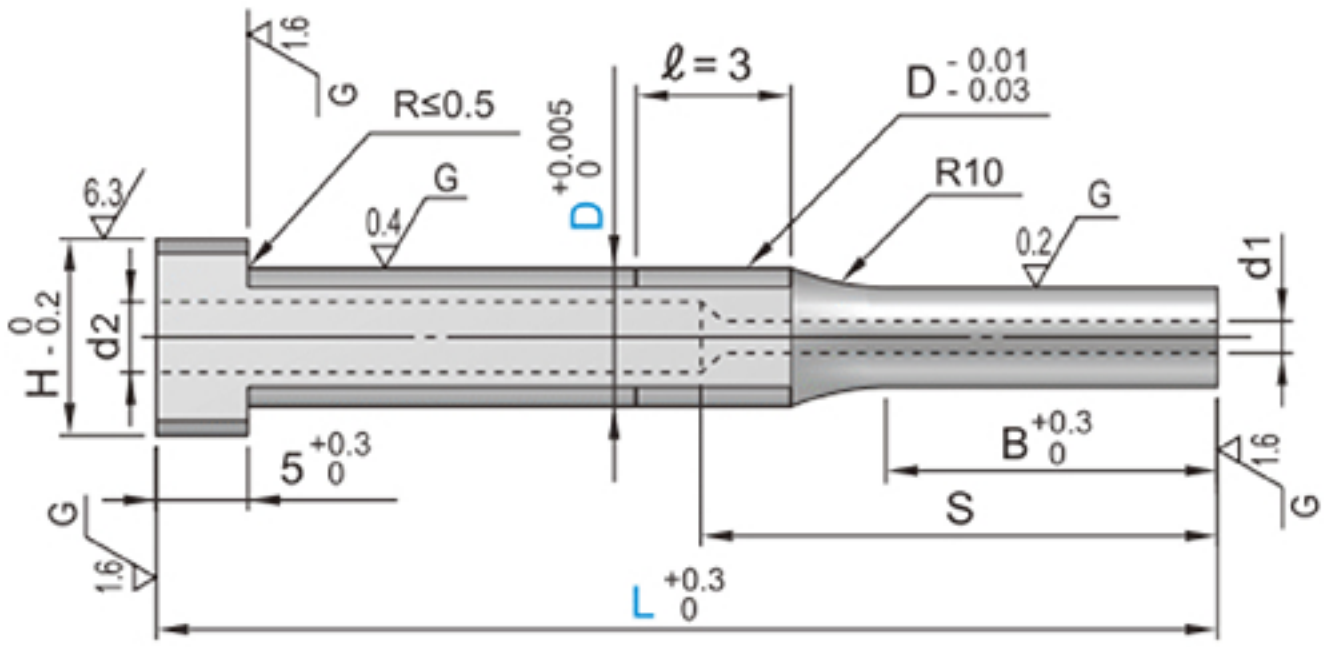

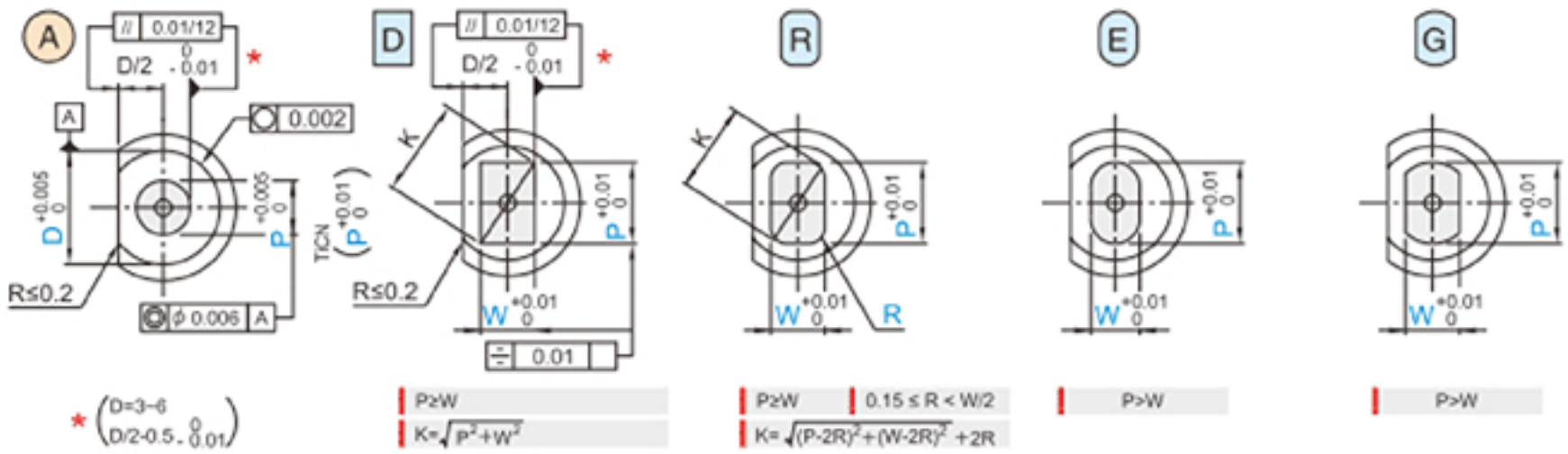

T	M	H	D	Type		Catalog No.	
					TiCN		(B) (L>S)
$D^{+0.005}_{0}$	V30(HIP)	88~89HRA	(8~16)	G-WWJ	GH-WWJ	A D R E G	S L

ORDER	Catalog No.	-	L	-	P	-	W	-	R (Ⓡ)
	G-WWJDS10	-	60	-	P8.00	-	W3.00		

Catalog No. Type			D	L	Ⓐ P	Ⓓ Ⓔ Ⓡ Ⓖ P-K max.	Wmax.	P-Wmin.	Ⓡ R	B	d1	S	d2	H
($D^{+0.005}_{0}$) G-WWJ -TiCN GH-WWJ	Ⓐ Ⓓ Ⓡ Ⓔ Ⓖ	S	3	40 · 50 · 60 · 70	1.00~ 1.80		—		0.15 ~ W/2 Ⓡ	8	0.3	—	0.3	5
			4		1.00~ 2.80	3.97	2.80	1.50			0.5	20	1.2	7
			5		2.00~ 3.80	4.97	3.80	2.00			0.8		2.1	8
			6		2.00~ 4.80	5.97	4.80	2.00					2.6	9
			8	(40) · 50 · 60 · 70 · 80	3.00~ 5.80	7.97	5.80	3.00		13	1.2	27	3.4	11
			10		3.00~ 7.80	9.97	7.80	3.00			1.6	28	4.4	13
			13		6.00~10.80	12.97	10.80	6.00			1.9			16
			16		10.00~13.80	15.97	13.80	6.00		19	2.9	36		19
		L	3	40 · 50 · 60 · 70	1.00~ 1.80		—			13	0.3	—	0.3	5
			4	50 · 60 · 70	1.00~ 2.80	3.97	2.80	2.00			0.5	20	1.2	7
			5		2.00~ 3.80	4.97	3.80	2.00			0.8		2.1	8
			6		2.00~ 4.80	5.97	4.80	2.00					2.6	9
			8	50 · 60 · 70 · 80	3.00~ 5.80	7.97	5.80	3.00		19	1.2	27	3.4	11
			10		3.00~ 7.80	9.97	7.80	3.00			1.6	28	4.4	13
			13		6.00~10.80	12.97	10.80	6.00			1.9			16
			16	60 · 70 · 80	10.00~13.80	15.97	13.80	6.00		25	2.9	36		19

① L(40)····▸ B=8
① Ⓓ Ⓔ Ⓡ Ⓖ: P-K>D-0.05 ····▸ ℓ=0

$D^{-0.01}_{-0.03}$

④ D=3~6 ····▸ a=0.5
D=8~16 ····▸ a=1

■ Fastening method of punch:

1、Punch fixed plate benchmark: This method is the most common method and should not be used for molds with small gaps.
（The punch is driven into the punch fixing plate, so the mold production is very simple. If the coaxiality of the punch and the hole processing accuracy of the punch fixing plate are low, the gap between the punch and the die is prone to unevenness, so it should not be used for molds with small gaps.）
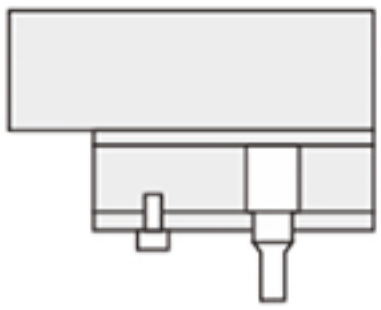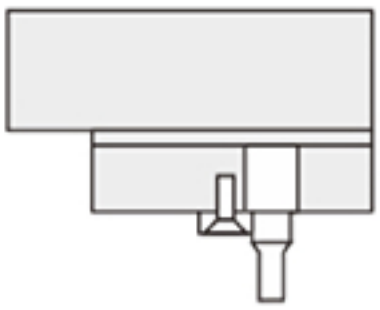
2、Unloading plate benchmark: This method is mainly used for high-precision molds of thin plates.
（On the discharge plate close to the male mold and the female mold, the blade of the male mold has a guide device, so the accuracy error can be kept to a minimum. The punch fixing plate is fastened by fitting the gap.）